SANI-LAV® COLUMBIA PRODUCTS

Mid-Sized Industrial Nozzle with Brass Body and Removable Tip

Model N1T

Model N1T

Model N1TY

Model N1TR

Model N1TW

Model N1TB

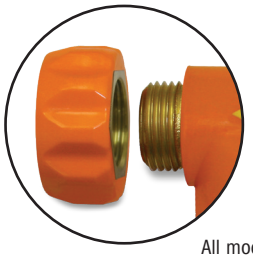

All models feature a removable 3/4" GHT threaded tip for attaching accessories

N1T Universal Features

- 3/4” GHT inlet allows direct hose connection
- Maximum working pressure 150 psi
- Maximum operating temperature: 200°F/93°C
- Weight 1.7 lbs.
- Safety shut off trigger when released
- Replaceable insolated safety orange, yellow, red, white or black covers

Model	Color	Body	Handle Type	Inlet	Tip	Max psi	Max Temp	Weight	GPM @ 100 psi	Swivel Adapter
Brass with Threaded Tip										
N1T	Safety Orange	Brass	Stainless	3/4” FGHT	3/4” GHT threaded	150	200	1.8	7	sold separately
N1YT	Yellow	Brass	Stainless	3/4” FGHT	3/4” GHT threaded	150	200	1.8	7	sold separately
N1RT	Red	Brass	Stainless	3/4” FGHT	3/4” GHT threaded	150	200	1.8	7	sold separately
N1WT	White	Brass	Stainless	3/4” FGHT	3/4” GHT threaded	150	200	1.8	7	sold separately
N1BT	Black	Brass	Stainless	3/4” FGHT	3/4” GHT threaded	150	200	1.8	7	sold separately

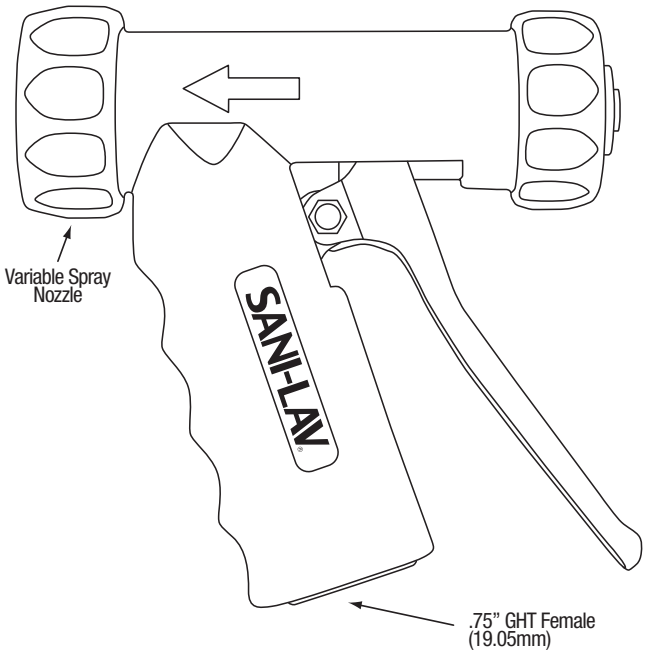

Variable Spray Nozzle

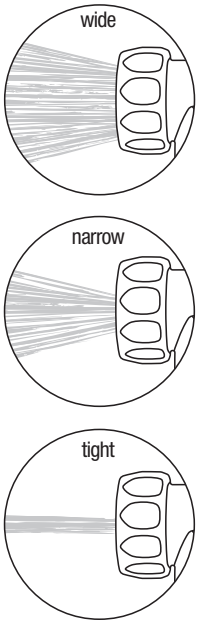

Trigger lever controls variable spray patern

Model N17 Swivel Hose Adapter
(3/4” FGHT x 3/4” MGHT)

Sold Separately

Featuring a removable 3/4” GHT threaded tip for attaching accessories

Notice for California Consumers

WARNING: This product can expose you to chemicals including Lead, and Phthalates (DEHP) which are known to the State of California to cause cancer and birth defects or other reproductive harm. For more information go to www.P65Warnings.ca.gov.

©2023 Columbia Products

N1T Replacement Parts

	Part No.	Description
A	N1TOC	Orange insolated cover
B	N1TYC	Yellow insolated cover
C	N1TRC	Red insolated cover
D	N1TWC	White insolated cover
E	N1TBC	Black insolated cover

F	N1TP	Orange Threaded tip for model N1T
G	N1TPY	Yellow Threaded tip for model N1TY
H	N1TPR	Red Threaded tip for model N1TR
I	N1TPW	White Threaded tip for model N1TW
J	N1TPB	Black Threaded tip for model N1TB
K	N1TMB	Main body
L	N1HR	**Handle replacement kit**
	1	Stainless steel nut
	2	Stainless steel handle
	3	Stainless steel handle arm sleeve
	4	Stainless steel handle bolt

M	N1BR	**Barrel cartridge replacement kit**
	5	Spray tip
	6	Seat
	7	Axle sleeve
	8	Stainless steel spring
	9	O-ring
	10	Axle bolt
	11	O-ring
	12	Axle
	13	Lock washer
	14	Bolt
	15	Viton inlet washer
N	N1E	Bolt sleeve
O	N1F	Locking nut

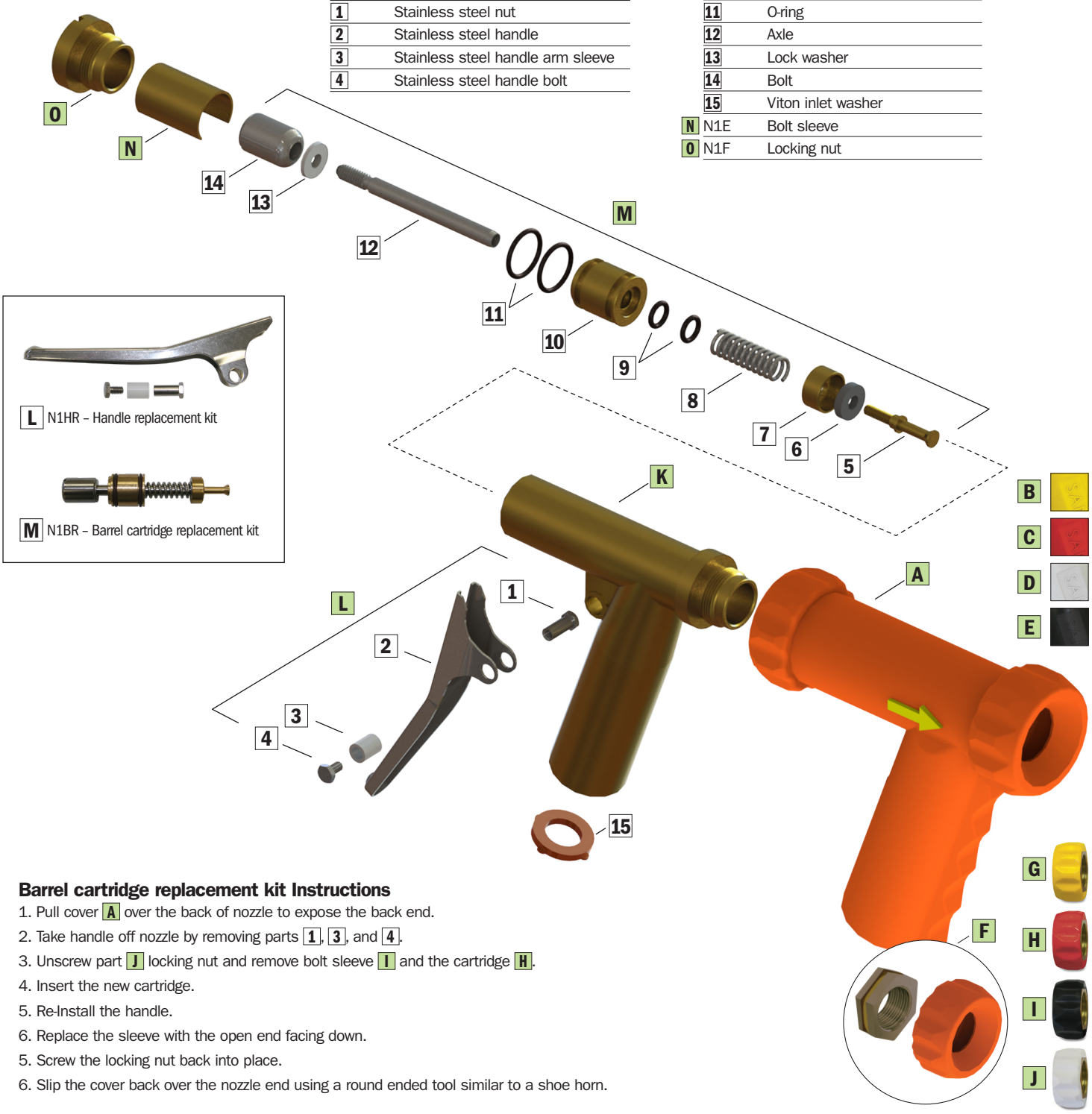

Barrel cartridge replacement kit Instructions

1. Pull cover A over the back of nozzle to expose the back end.
2. Take handle off nozzle by removing parts 1, 3, and 4.
3. Unscrew part J locking nut and remove bolt sleeve I and the cartridge H.
4. Insert the new cartridge.
5. Re-Install the handle.
6. Replace the sleeve with the open end facing down.
5. Screw the locking nut back into place.
6. Slip the cover back over the nozzle end using a round ended tool similar to a shoe horn.

©2023 Columbia Products